WD Series Wall Mount Enclosure

WD SERIES WALL MOUNT/SWING OUT Enclosures
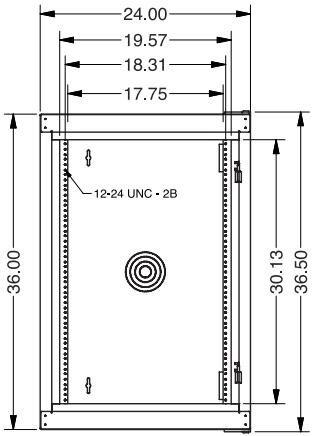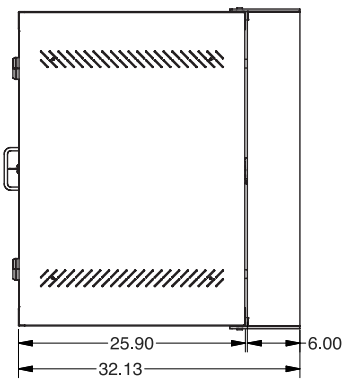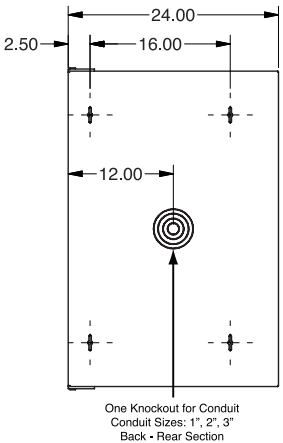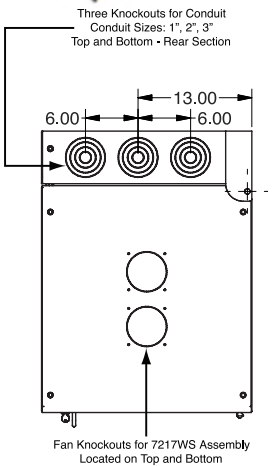
New